POWER DOOR LOCK CONTROL SYSTEM

BE1MI-01
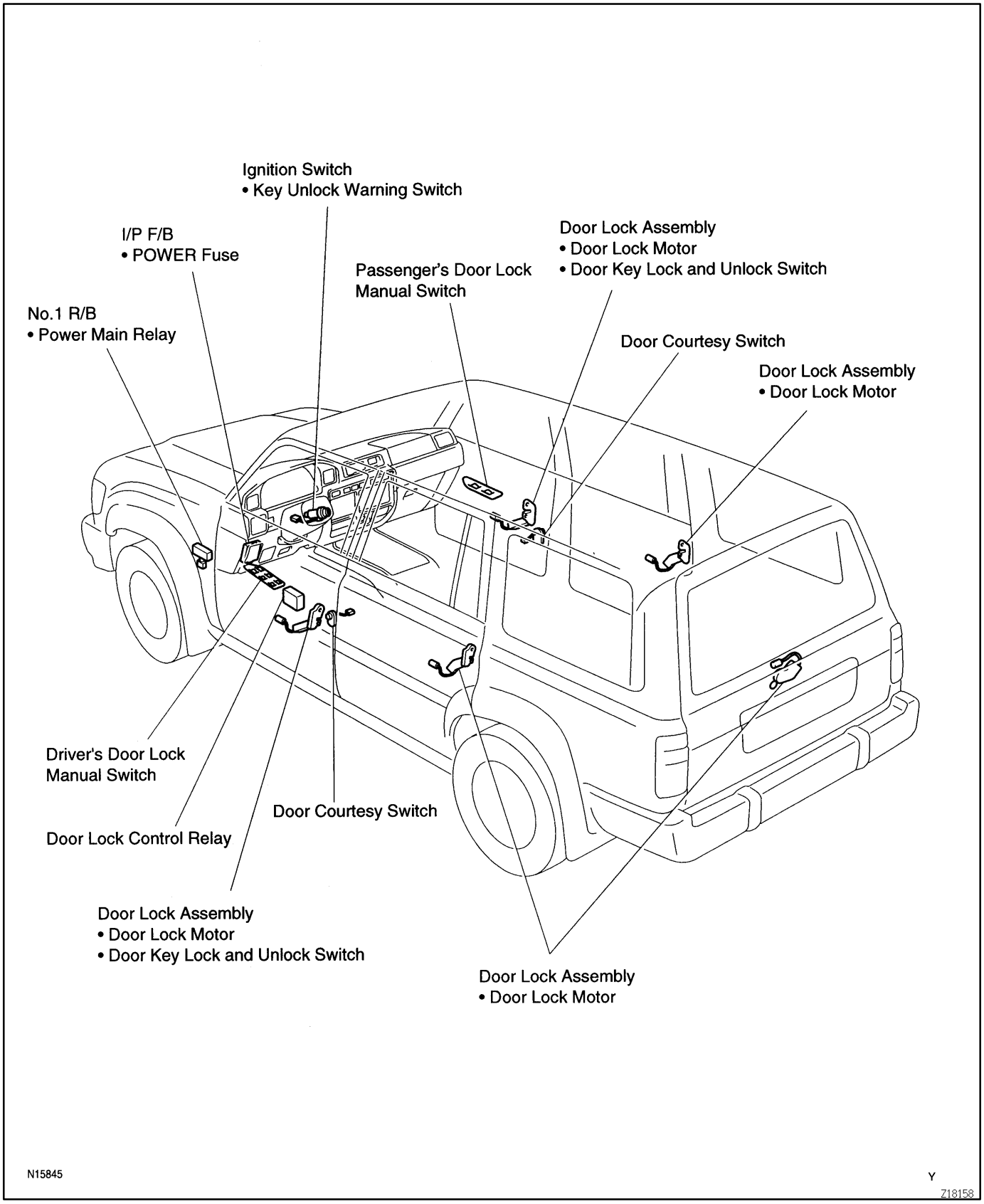
LOCATION